Extractive type Gas Detector

Model PD-12Ⅱ

Instruction Manual

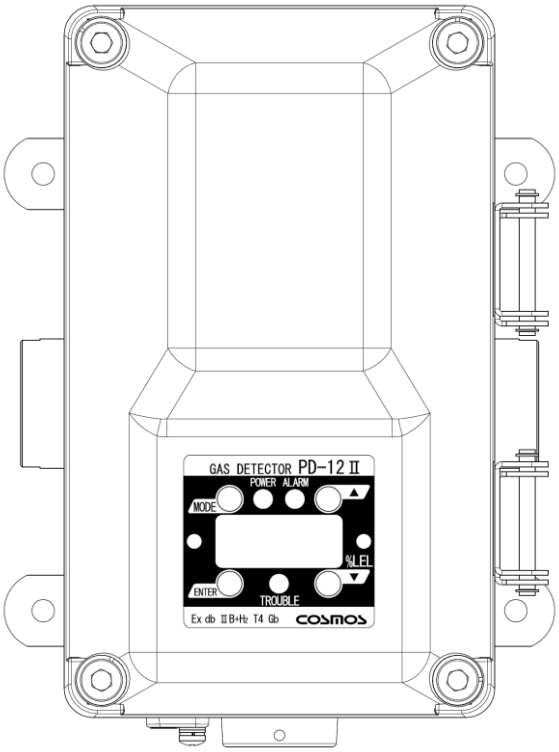

- Keep this instruction manual where it is readily accessible.
- Thoroughly read this instruction manual before using the equipment so it can be used safely and correctly.
- This manual provides information concerning standard specifications. If the specifications of your model are nonstandard, refer to the delivery specifications.

NEW COSMOS ELECTRIC CO.,LTD.

Instruction Manual No.
GAE-190-02
May 2026

• Nomenclature

See pages 5 to 8.

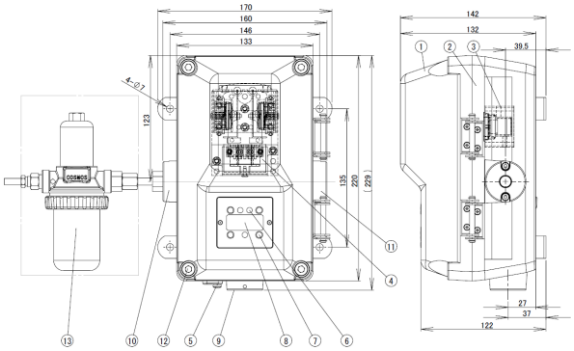

• Replacement of Sensor Unit

See pages 30 and 32.

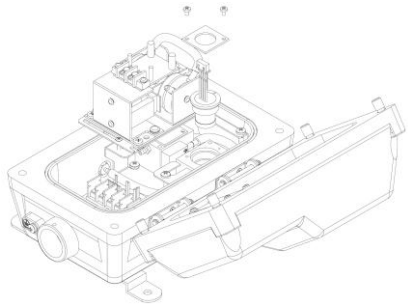

• Wiring and Connecting Methods

See pages 13 to 15.

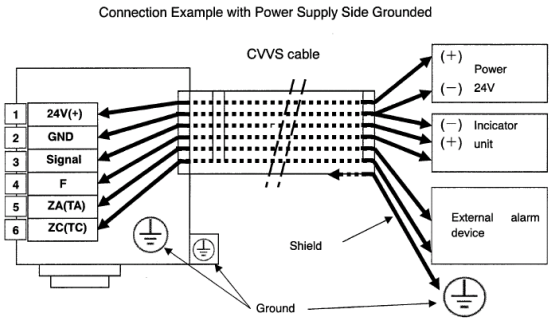

• Display and Operation in Each Mode

See page 18.

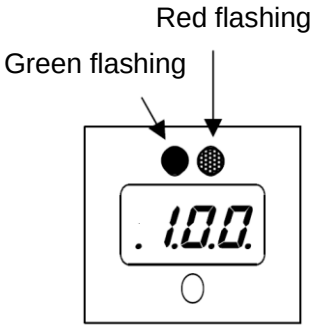

• Maintenance Check and Operation Methods

See pages 20 to 33.

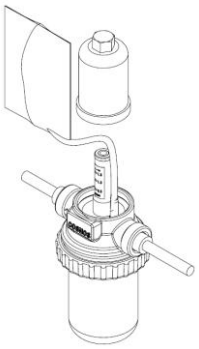

• Troubleshooting

See pages 34 to 35.

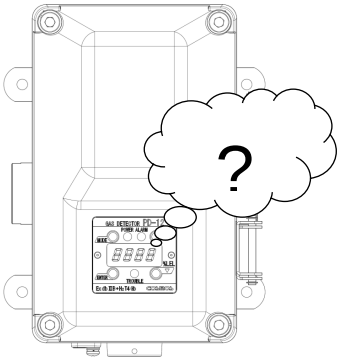

Table of Contents

1. Introduction 1
2. Precautions 2
3. Contents of Package 4
4. External Dimensions and Nomenclature 5
   4-1. Main Unit 5
   4-2. Display and Control Blocks 6
   4-3. Terminal Block 7
   4-4. Flow Diagram 8
5. Installation 9
   5-1. Installation Method 9
   5-2. Mounting of Optional items 12
6. Wiring Method 13
   6-1. Wiring Work 13
   6-2. Wiring and Connection 13
7. Precautions before Use 16
   - In Case of Gas Leakage 16
8. Display at Start-up (Initial Delay) 17
9. Display and Operation in Each Mode 18
10. Trouble Alarm 19
11. Maintenance Check and Operation Method 20
   11-1. Daily Inspection and Periodical Inspection 20
   11-2. Preparing Calibration Gas 22
   11-3. Calibration Method 24
   - Maintenance Mode 24
   - Zero Adjustment 25
   - Span Fine-tuning 26
   - Span Rough Adjustment 27
   - Full-scale and Alarm Set Value Display 28
   - Test Mode 29
   11-4. Replacement of Sensor Unit 30
   11-5. Replacement of Pump Unit 32
   11-6. Replacement of Filter with Flow Checker (FC-32) 33
12. Troubleshooting 34
13. Specifications 36
   13-1. Product Specifications 36
   13-2. Explosion-proof Specifications 38
14. Warranty 39
15. Life Expectancy 40
16. Detection Principle 41
   16-1. Catalytic Combustion 41
   16-2. Hot Wire Semiconductor 41
   16-3. Thermal Conductivity 41
17. Glossary 42

1. Introduction

- Thank you for purchasing the PD-12Ⅱ Extractive type Gas Detector.
- In order to ensure the correct and safe operation of this product, be sure to read this manual before use.
- This product detects various types of gas including combustible gas in industrial facilities. The product detects gas leakage at an early stage in industrial facilities (e.g., gas production plants and depots, chemical plants, paint factories, and power plants), and outputs the gas concentration value in analog signal form while displaying the gas concentration value.
  If the gas concentration reaches a preset alarm level, the red ALARM indicator will flash and turn ON an external contact output, thus helping to prevent disasters such as explosion accidents and fires.

- The following PD-12Ⅱs are available, according to the gas sensor incorporated.

Model	Detection Principle
PD-12ⅡA	Hot-wire Semiconductor sensor
PD-12ⅡB	Catalytic Combustion sensor
PD-12ⅡC	Thermal Conductivity sensor

- Maintenance and inspection are indispensable to the reliable performance of the Gas Detection/Alarm System. Be sure to perform the maintenance checks described in this manual.

Explanation of Symbols

The following symbols are used to indicate and classify precautions in this manual.

⚠ **DANGER**	Indicates information that, if not heeded, is likely to result in death or serious injury.
⚠ **WARNING**	Indicates information that, if not heeded, could possibly result in death or serious injury.
⚠ **CAUTION**	Indicates information that, if not heeded, could result in minor injury, or damage to the product.
MEMO	Indicates advice on handling the product.

2. Precautions

- Read this manual completely and be sure you understand the information provided herein before attempting to use the product.
- Abide by all applicable laws and regulations when using this product.

⚠ WARNING

- Do not open when energized.
- Do not open when an explosive atmosphere may be present.
- Do not disassemble the product or modify the construction or electric circuits of the product. Otherwise, the explosion-proof construction of the product may be adversely affected.
- Be sure to ground the product to prevent electric shocks.
- If there is a gas leak alarm, take the necessary measures in accordance with your company's regulations.
- The cable entry device and blanking elements shall be of certified in type of explosion protection flameproof enclosure ‘’db’’, suitable for the condition of use and correctly installed.
- Unused apertures shall be closed with suitable certified blanking elements.
- Avoid using the product in an environment where it will be exposed to organic solvents such as aromatic hydrocarbon or halogen hydrocarbon for extended periods. It may affect polymeric materials.
- To avoid the buildup of a static charge, do not rub the surface of the product with a dry cloth.
- Use a conductor with a cross-sectional area at least 4mm^2 for grounding the unit.

⚠ CAUTION

- All necessary work for the product including wiring and installation should be carried out by suitably trained personnel in accordance with applicable code of practice.
- Inspection, maintenance and repair of the equipment should be carried out by suitably trained personnel in accordance with applicable code of practice.
- Do not install the product in places or near places where silicone sealant or gas is used. Otherwise, the performance of the product may be adversely affected.
- Do not use the Detector continuously over a long period of time in an environment that contains organic solvents, such as aromatic hydrocarbons and halogen hydrocarbons.
- Be sure to provide a protective cover (optional) if the product is installed outdoors.
- Use the product in accordance with applicable laws and regulations.
- Fastener type M4 x 16 and M8 x 25 shall have a yield stress factor of min. 450 N/mm^2.

Special Condition for Safe Use

- If used in an ATEX hazardous area, an ATEX-certified cable gland or any devices (Ex db IIB+H_2 Gb or Ex db IIC Gb) must be usedaccording to EN IEC 60079-0:2018 and EN 60079-1:2014.
- If used in an IECEx hazardous area, an IECEx-certified cable gland or any devices (Ex db IIB+H_2 Gb or Ex db IIC Gb) must be used according to IEC 60079-0:2017 Ed. 7 and IEC 60079-1:2014 Ed. 7.
- Cable entry requirements for cable gland

  <Thread type >

  Thread size: M25

  Pitch: 1.5mm

  Minimum depth of engagement : 12mm

  Minimum thread engagement: 8 threads

  Quality of fit: 6g/6H

  Enclosure material: Aluminum alloy

  Thickness of enclosure wall: 3mm (min)

  <Requirements for installation into enclosure>

  When using a CG-15 cable gland, follow the instructions below.

  ・Fully insert the gland base into the enclosure's cable entry.

  ・Fully tighten the M4x6 hexagon socket head screw until the head of the screw is flush with the enclosure surface.

  When using a cable gland other than CG-15, follow the instructions below.

  ・Since the thread entry is recessed, use a cable gland that matches the figure below.

  ・The cable gland should be compatible in form and fit, and include a non-detachable, non-compressible washer or an equivalent device or means to ensure the thread engagement requirements are met.

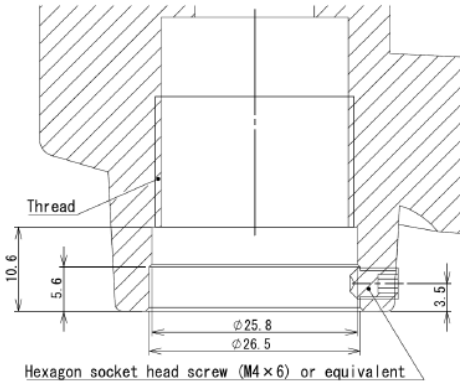

(Dimensions are in mm)

- The measuring function of gas detector for explosion protection in accordance with Annex II clauses 1.5.5, 1.5.6 and 1.5.7 of the Directive 2014/34/EU, is not covered in this certificate.
- The customer shall contact the manufacturer for flame path information in order to carry out inspection, repair or adjustment of flameproof joint.
- Fastener type M4 x 16 and M8 x 25 shall have a yield stress factor of min. 450 N/mm^2.

3. Contents of Package

- The product is provided with the following items. Make sure that none of these items is missing.
- Although the product is packed and shipped with the utmost care, contact your New Cosmos representative if there should be any damage or missing items.

Accessories	Optional items
Detector head Gas collector PF-N3 (see note 1) Flow checker FC-32 (see note 2) Four M6 screws Two Joints Hexagon wrench (each of nominal 2 and 6: see note 3) Instruction Manual (see note 3) MJ-1 Magnetic Stick: 1pc	Protective cover (see note 4) Auto drain AD-40 (see note 5)

Note: 1. It is put on the tip of sampling hose in order to drain rain drop / water splash.
Do not use the collector when the sampling is made in ducts, furnaces and closed cabinet.

2. Specifications of the Flow checker FC-32 vary according to the requirement. Refer the specification sheets for the details.
3. A pair of hexagon wrenches and instruction manual are provided for each order.
4. It is used when the detector is installed outdoor.
5. The Auto drain is designed to automatically discard the accumulated moisture from gas sampling hose from pits / furnaces.

⚠ WARNING

- Do not use the magnetic stick for any purposes other than the operation of this product.
- Keep in mind that when the magnetic stick attracts magnetic objects, tools, iron pieces, etc., your hands may become pinched and injured.
- Do not touch the magnet if you are allergic to metal, otherwise your skin may become chapped or reddened.
- Generally speaking, magnets break easily and the corrosion of the magnet progresses from the fracture location. Fragments of the magnet may also get in your eyes or injure your skin.
- The components of the magnetic stick may melt into water. Do not drink water exposed to the magnetic stick.
- Keep the magnetic stick away from electronic medical devices, such as cardiac pacemakers, or the magnetic stick may obstruct the normal operation of the device.

⚠ CAUTION

- Keep the magnetic stick away from magnetic tapes, floppy disks, and prepaid cards. Otherwise, they may become magnetized and the information that they hold may be lost.
- Keep the magnetic stick away from high-precision devices, such as personal computers and watches. Otherwise, they may malfunction.

4. External Dimensions and Nomenclature

4-1. Main Unit

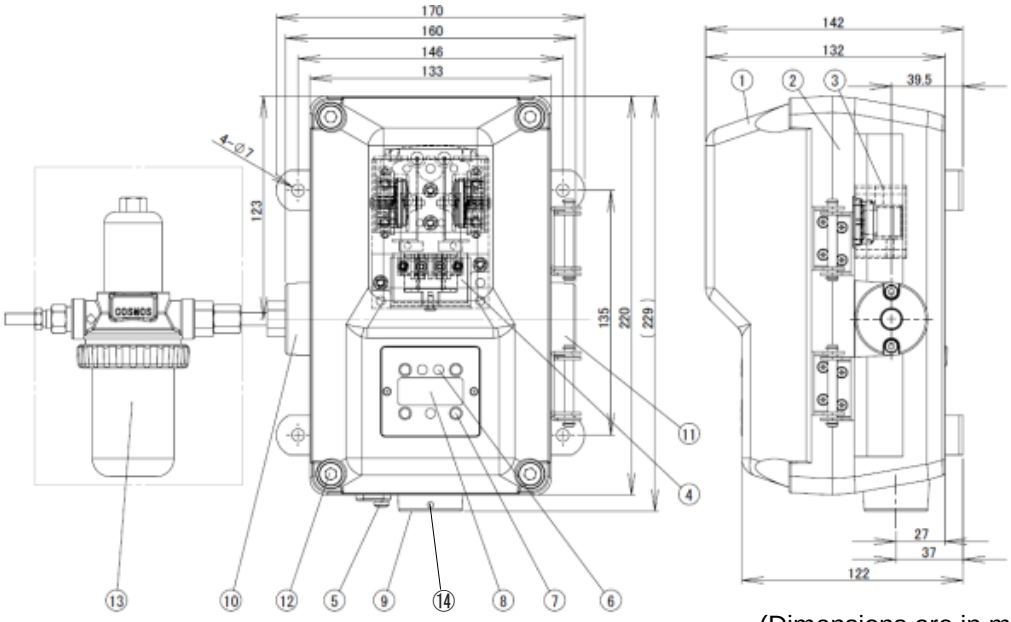

(Dimensions are in mm)

No.	Name	Description
1	Casing cover	
2	Casing	
3	Sensor unit	Incorporates a gas sensor.
4	Pump unit	Draws sample gas and exhaust it.
5	Ground terminal	Used when grounding the frame.
6	State display indicator	Indicates the power supply state (green), alarm state (red), and trouble state (yellow).
7	Control block	Insert the magnetic stick to control or set the product.
8	Display block	Displays the gas concentration and set values.
9	Cable entry	Install appropriate cable gland. See the “Special Condition for Safe Use” <Thread type > Thread size: M25 Pitch: 1.5 mm Minimum depth of engagement: 12 mm Minimum thread engagement: 8 threads Quality of fit:6g/6H Enclosure material: Aluminum alloy Thickness of enclosure wall: 3mm (min)
10	Gas inlet	Inlet for sampled gas. (Size : R/c 1/4)
11	Gas outlet	Exhaust outlet for sampled gas. (Size : R/c 1/4)
12	Bolt with hexagon socket	Used for securing the casing cover. Use a hexagon wrench with a nominal 6.
13	Flow checker FC-32	Prevents dust from entering the gas inlet. (Size R/c 1/4)
14	Bolt with hexagon socket	Used for securing the casing cover. Use a hexagon wrench with a nominal 2.

4-2. Display and Control Blocks

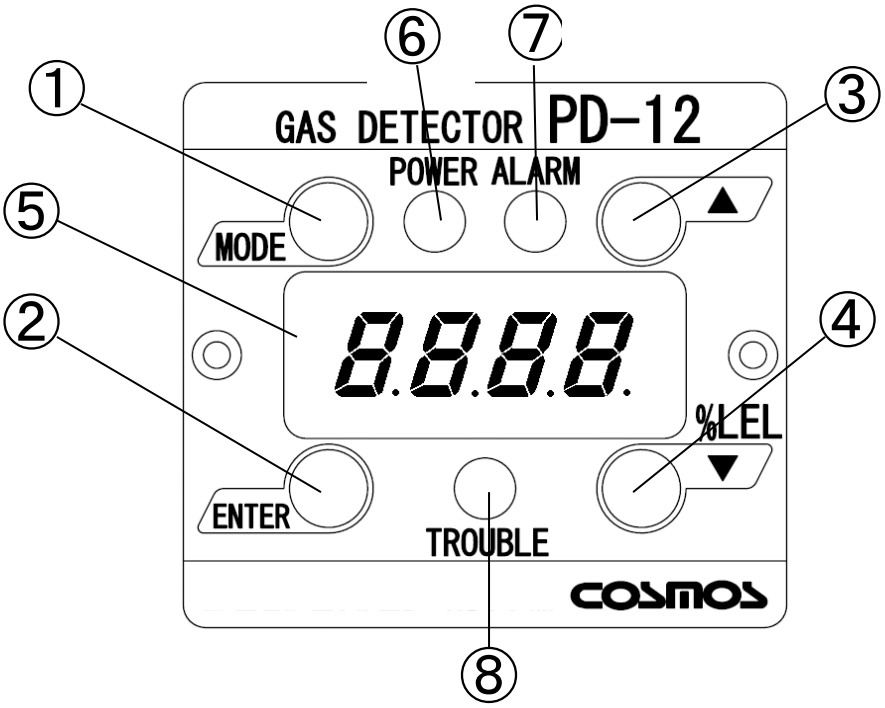

Magnetic switches (Insert the magnetic stick to operate the magnetic switches.)		
No.	Name	Description
1	MODE switch	Makes adjustments and settings or cancels the operation of the product.
2	ENTER switch	Enters settings or completes the control of the product.
3	UP switch	Makes adjustments and settings or increases set values and other values.
4	DOWN switch	Decreases set values and other values.

No.	Name	Description
5	Display block	Displays the concentration of gas and set values.

State display indicator		
No.	Name	Description
6	POWER indicator	A green lamp to display the power supply state.
7	ALARM indicator	A red lamp to display the alarm state.
8	TROUBLE indicator	A yellow lamp to display the trouble state.

4-3. Terminal Block

Terminal Block

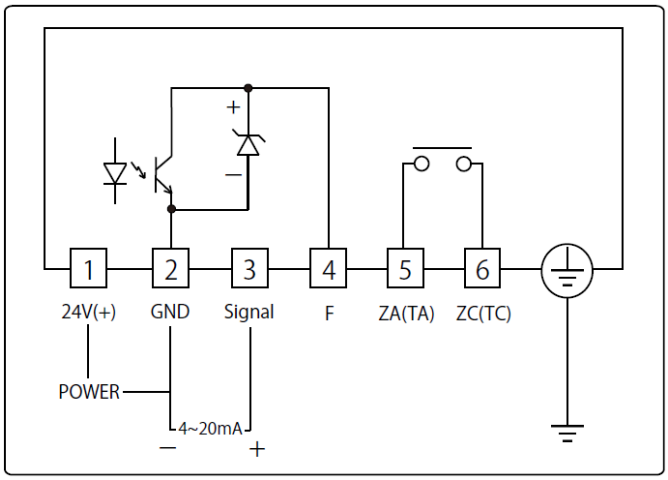

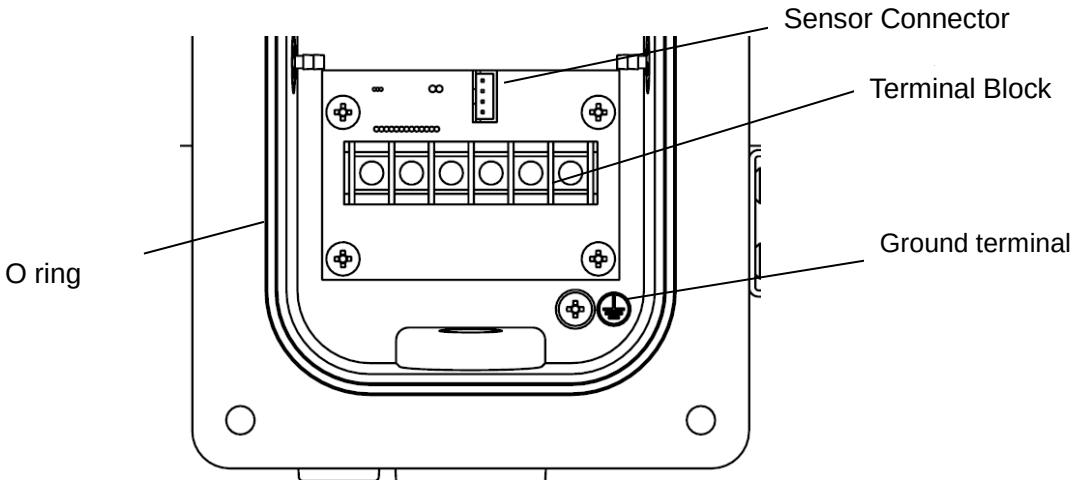

No.	Name	Description
1	24 V (+)	Power supply voltage (positive)
2	GND	Power supply voltage and analog signal (negative) common
3	Signal	4- to 20-mA analog signal
4	F	Flow trouble output*(Rated load: 30mA at 30 VDC, resistance load)
5	ZA (TA)	ZA, ZC :External alarm contact (TA, TC : External trouble alarm contact)
6	ZC (TC)	
⏚	Ground terminal	Used to ground the frame.

*When flow decreases. (Open collector. Normally ON. When trouble / no power supply OFF). The flow trouble output is optional function.

※For the PD-12Ⅱ□N series (without flow sensor), the F contact output is unstable and should not be connected.

MEMO Either external gas alarm contact or external trouble alarm contact is equipped on the detector. Refer the specification sheets for the details.

4-4. Flow Diagram

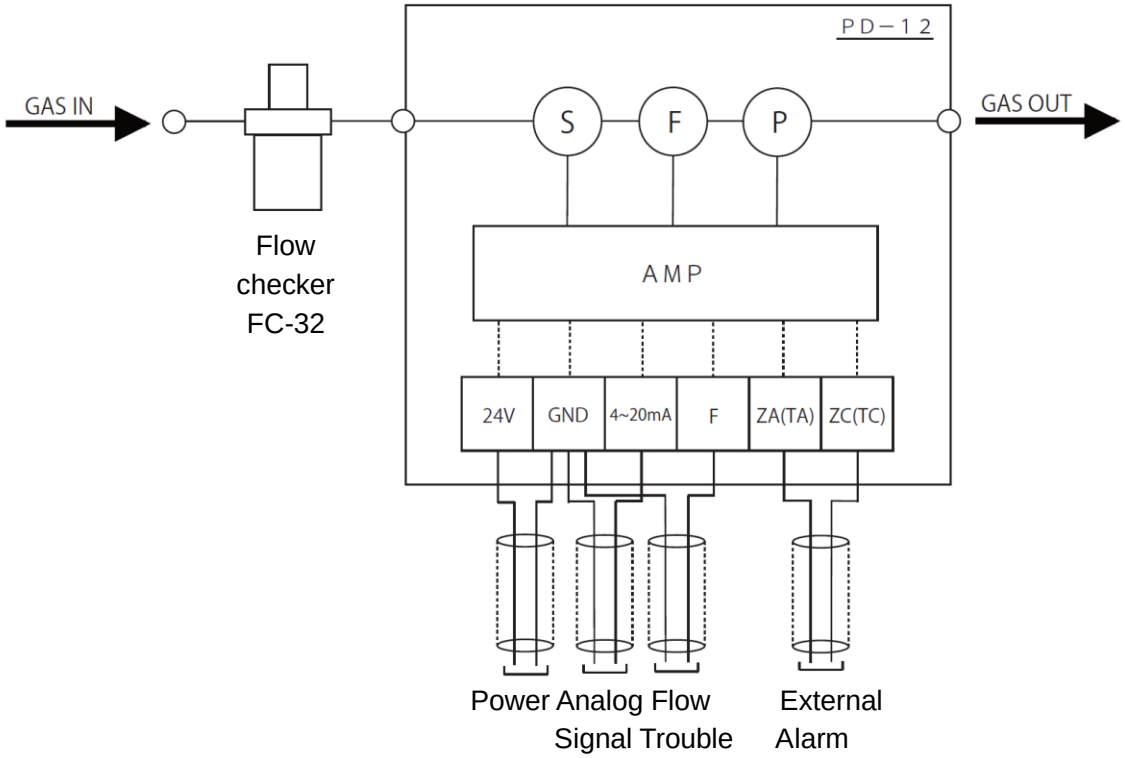

Main components and functions

1) Sensor : Converts gas concentration detected to an electrical signal.
One from the catalytic combustion sensor, Hot-wire semiconductor Sensor or Thermal conductivity sensor is on the detector.

2) Flow sensor : Give the low flow signal when the flow decreased.
(It's optional function)

3) Pump : Draw the sample gas through sampling pipe from the detection point.

4) AMP : Converts sensor output to an electrical signal. It also provides the power to the sensor and the other devices composed.

5) Terminal block : Terminal block for external connection
Refer 6. Wiring Method for the details.

5. Installation

5-1. Installation Method

⚠ WARNING

- Do not open when energized.
- Do not open when an explosive atmosphere may be present.
- Do not disassemble the product or modify the construction or electric circuits of the product. Otherwise, the explosion-proof construction of the product may be adversely affected.
- The cable entry device and blanking elements shall be of certified in type of explosion protection flameproof enclosure ‘’db’’, suitable for the condition of use and correctly installed.
- Unused apertures shall be closed with suitable certified blanking elements.

⚠ CAUTION

- Be careful not to damage the gas detector when installing it. Otherwise, the explosion-proof performance of the gas detector will be lost.
- Use appropriate piping material considering type of gas to be detected.
- Maximum length of the piping should be less than 20m. Pay attention that the response time of the detector shall be delayed when the length of the piping is longer due to transport time of sampled gas. And the length of the piping should be as short as possible when the type of gas to be detected is highly absorbent gases.
- Do not install the product in the following places.
  - Places where the ambient temperature exceeds the operating temperature range (–10°C to 50°C).
  - Places where condensation occurs, or water is directly sprayed.
  - Places subject to corrosive gas.
  - Places where are in direct sunshine.
  - Places close to equipment that generates high frequencies or a magnetic field.
  - Places where silicone sealant is used or likely to be used.
  - Places where silicone gas is used or likely to be used.
- Do not install the gas detector or tip of sampling pipe where vapor which contains silicone, or the sensor may be adversely affected.
- Install the gas detector in places where it can be maintained and inspected with ease.
- Install the gas detector in places free from vibration.
- Install the gas detector in places free from sudden temperature changes.
- Keep the gas detector free from impacts.
- When installing the gas detector outdoors, be sure to install the protective cover (optional).
- Install Auto drain (option) when the gas sampling is made near the outlet of steam or where likely to suck the water.
- The pressure of gas inlet port should be ±1kPa and the pressure of outlet port should be less than 1kPa.
- Fastener type M4 x 16 and M8 x 25 shall have a yield stress factor of min. 450 N/mm^2.

1) Locate the tip of the gas sampling pipe to be appropriate for the specific gravity of the gas to be detected. It must also be placed in a location where the target gases are likely to accumulate.

Installing Height

Type of gas	Installing height	Remarks
Gas heavier than air (Example: LPG)	A maximum of 10 cm above the floor. (Height to the sensor guard tip)	Keep a space of approximately 7 cm from the sensor guard tip for ease of maintenance and inspection.
Gas almost the same as air in specific gravity (Example: Carbon monoxide)	75 to 150 cm above the floor. (Height to the sensor guard tip)	Decide the height by considering the specific gravity and mounting environment.
Gas lighter than air (Example: City gas and hydrogen)	Near the ceiling	Decide the height by considering arrangements for ease of maintenance (e.g., a scaffold).

2) Install the gas detector in places where it can be maintained and inspected with ease. Followings are locations where leaked gas may accumulate and appropriate locations for installation of gas detectors.

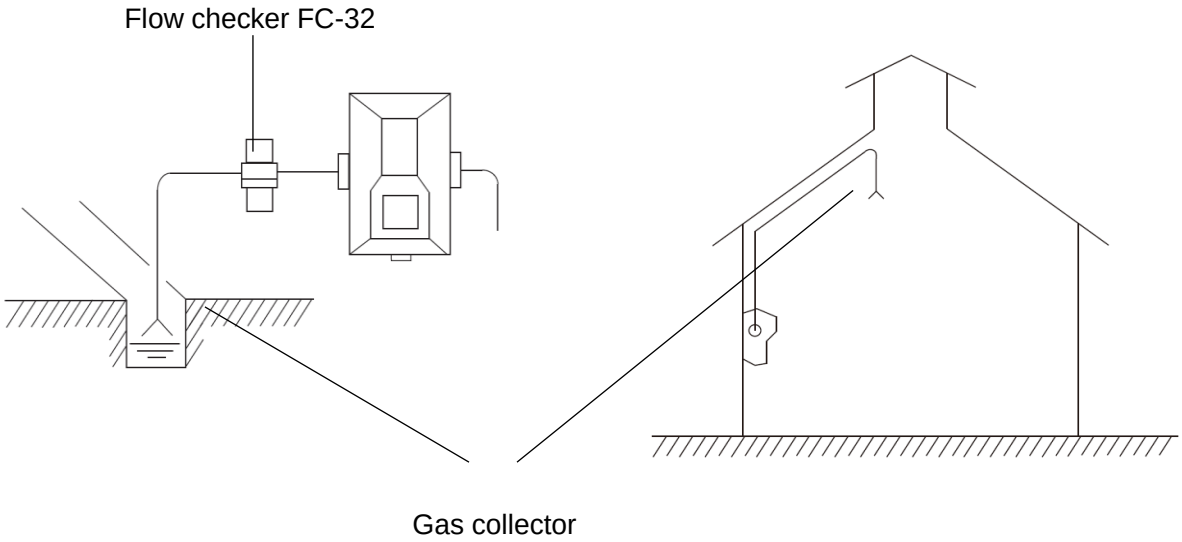

⚠ CAUTION

- Place the tip of sampling pipe above water level.

3) Mount the main unit to the wall with the M6 screws that are provided with the product. It is necessary to open the casing cover at the time of wiring and replacing the sensor. Install the gas detector in places where the cover opening angle can be more than 90 degree. Be sure to install the protective cover (optional) when mounting the main unit outdoors. (Refer to *5-2 Mounting of Optional items* for details of optional products.

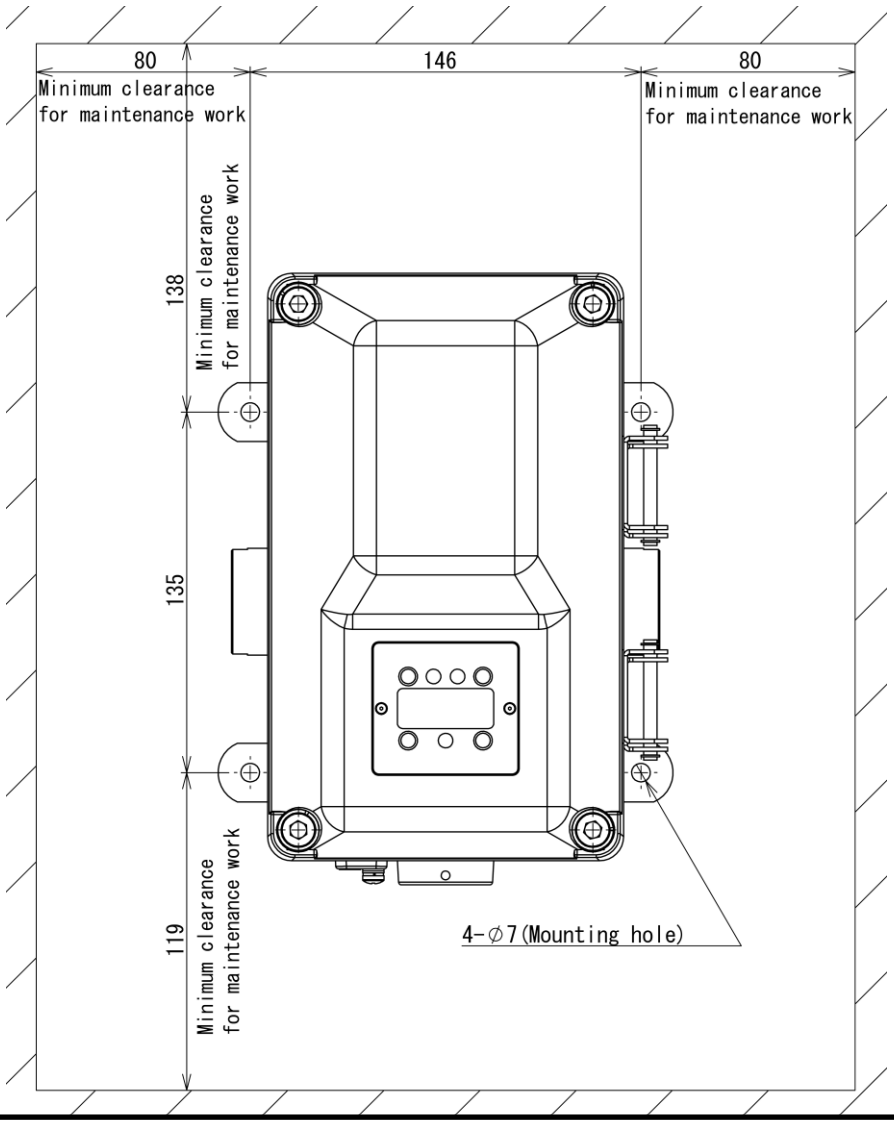

⚠ CAUTION

- The minimum bend radius of the cable is not included in the minimum clearance for maintenance work. Please maintain an appropriate space for the depending on the cable specifications and wiring method.

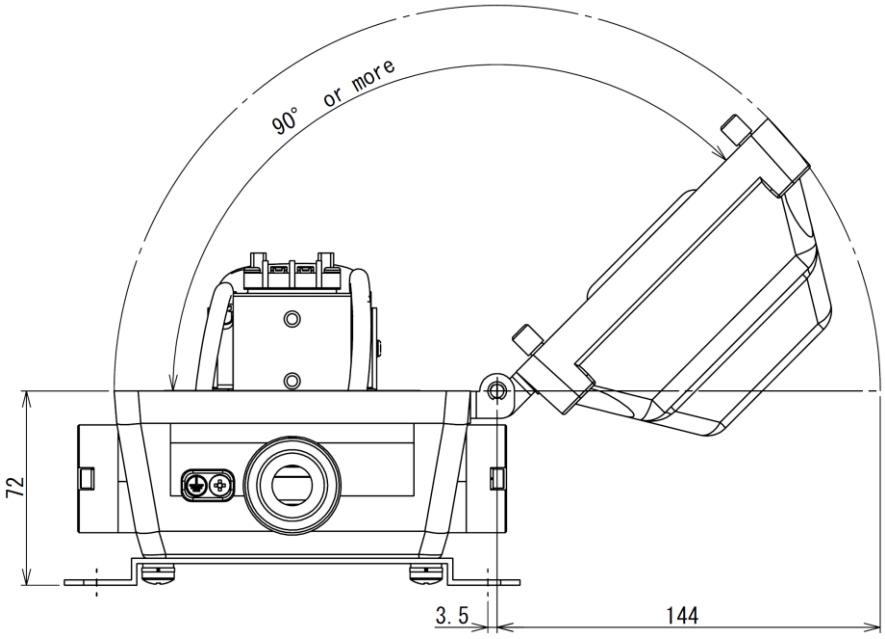

(Dimensions are in mm)

5-2. Mounting of Optional items

- Protective Cover

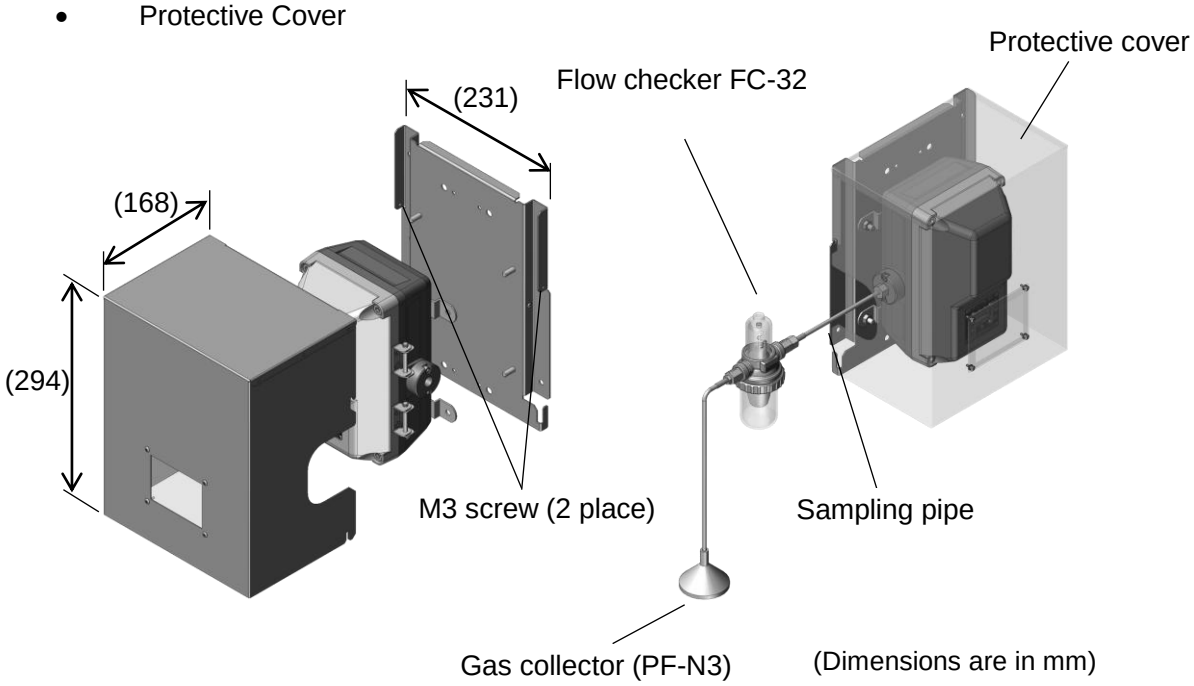

⚠ CAUTION

- Secure the casing cover with M3 screws if strong winds are expected.

- Auto drain AD-40

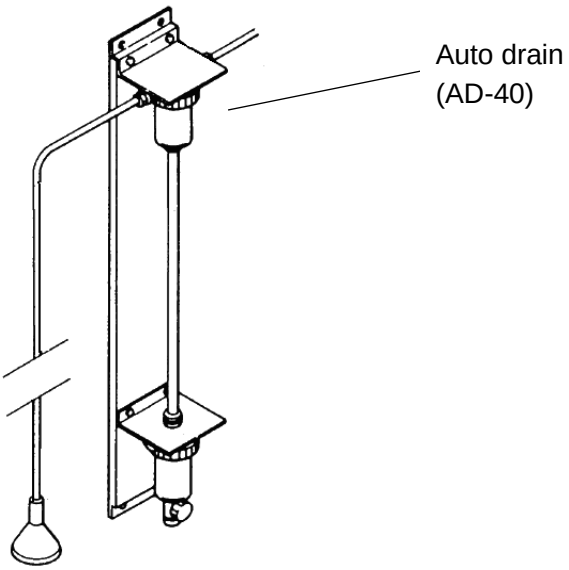

6. Wiring Method

6-1. Wiring Work

- Be sure to provide explosion-proof wiring if the product is to be used in hazardous places.

⚠ WARNING

- The cable entry device and blanking elements shall be of certified in type of explosion protection flameproof enclosure ‘’db”, suitable for the condition of use and correctly installed.
- Unused apertures shall be closed with suitable certified blanking elements.

⚠ CAUTION

- All necessary work for the product including wiring and installation should be carried out by suitably trained personnel in accordance with applicable code of practice.
- Inspection, maintenance and repair of the equipment should be carried out by suitably trained personnel in accordance with applicable code of practice.

Special Condition for Safe Use

- If used in an ATEX hazardous area, an ATEX-certified cable gland or any devices (Ex db IIB+H_2 Gb or Ex db IIC Gb) must be usedaccording to EN IEC 60079-0:2018 and EN 60079-1:2014.
- If used in an IECEx hazardous area, an IECEx-certified cable gland or any devices (Ex db IIB+H_2 Gb or Ex db IIC Gb) must be used according to IEC 60079-0:2017 Ed. 7 and IEC 60079-1:2014 Ed. 7.

Cable Work

- Use a shielded cable, such as CVV-S with a thickness of 1.25 to 2.00 mm^2. Lay all cables in protective tubes, such as metal conduits or carbon steel pipes, or other protective structure, such as a metal / concrete duct.
- All joints should be connected with necessary couplings, fittings & etc. in accordance with applicable code of practice.

6-2. Wiring and Connection

⚠ WARNING

- Before opening the casing cover of the gas detector, be sure to turn off the product and all devices (e.g., indicator unit and signal converter) connected to the product.
- If the power is turned ON, the power supply may become a source of ignition.
- Be sure to ground the product to prevent electric shocks.
- Do not damage the surface of the detector, or the explosion-proof performance may be adversely affected.

⚠ CAUTION

- Wire the connecting terminals correctly.
- Separate connection cables from power lines as far as possible.

Connecting Power Supply and Signal Wires

- Provide dedicated breakers, if needed, to lines that are connected to peripheral devices, such as indicator units and signal converters.
- Use a dedicated cable, such as CVV-S (with a thickness of 1.25 to 2.00 mm^2).
- Make sure that the power supplied to the product is within the specified voltage range.
- Make sure that the load resistance of the signal line, including the resistance of the wire, is 300 ohm or less.

MEMO

- If the main unit is grounded on the power supply side, do not connect a shielded cable to the ground terminal (E) in the gas detector, or otherwise two-point grounding will result.

Connection Example with Power Supply Side Grounded

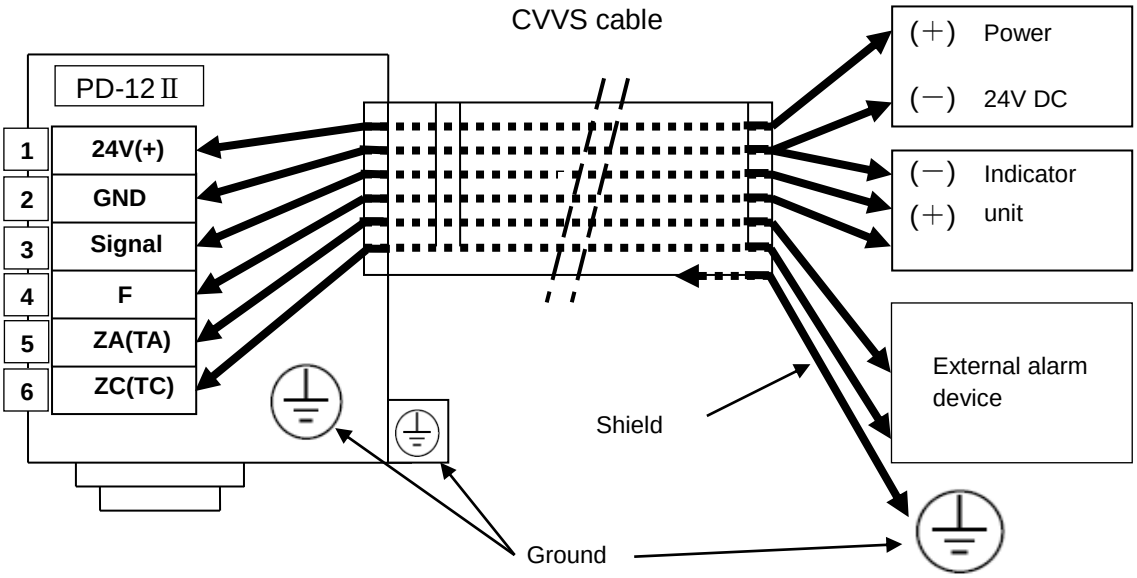

Connection method of external ground

- Use a conductor with a cross-sectional area at least 4mm^2 for grounding the unit.
- Place a plain flat washer between the case and the terminal.

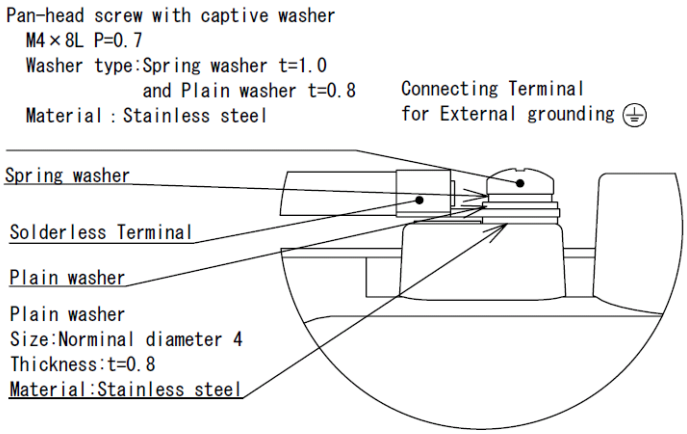

Connection Form Diagram

System Configuration Example

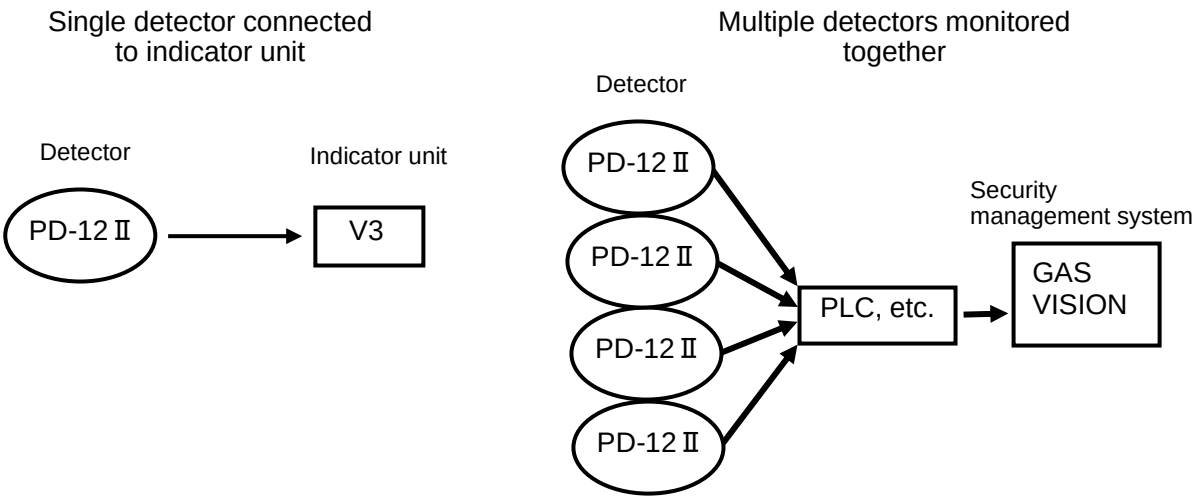

- For details, refer to the Instruction Manual of each device.

Typical Connection Procedure

1) Prepare a power supply that can provide 24 V DC.
   (Do not turn on the power supply before wiring the main unit.)
2) Loosen the hexagon socket bolts on the four corners of the main unit using the provided hexagon wrench with a nominal 6, and open the casing cover of the main unit.
3) Loosen and remove the screws on the terminal block.
4) Connect the positive side of the power supply to the 24 V+ terminal.
5) Connect the negative side of the power supply to the GND terminal.

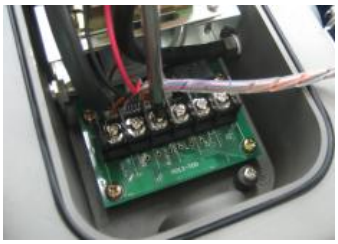

6) Check that the power supply cords are securely connected to the terminals. This completes the power supply preparations.
7) Wire the analog signal and external contact terminals, if required.
8) Tighten the hexagon socket bolts (tightening torque : 0.8 – 2.4 N･m) on the four corners of the main unit and close the casing cover of the main unit.

⚠ CAUTION

- When closing the casing cover, make sure that the power supply cord, harness, and O-ring are not caught by the casing cover.

7. Precautions before Use

⚠ CAUTION

- Before turning ON any of the devices (e.g., indicator unit, signal converter) connected to the product, recheck that all of the connections are correct. Make sure that the gas detector and indicator unit or signal converter, in particular, are connected properly.

● In Case of Gas Leakage

⚠ DANGER

- Without panicking, check that there is no fire around the product. Do not touch any electric switches under any conditions. Sparks from turning electric switches ON or OFF may cause ignition.
- Do not open when an explosive atmosphere may be present.

⚠ WARNING

- If there is a gas leak alarm, take the necessary measures specified by your company.
- If a gas leak occurs indoors, open the windows and doors to ventilate the room.
- Check the gas leakage location and promptly take the necessary measures.

8. Display at Start-up (Initial Delay)

⚠ CAUTION

- Check that there is no gas around the product before starting the product.
- If the sensor output is not stable, the external contact point may operate after the initial delay. Release the interlock of the external equipment if necessary.
- During the initial delay, the analog signal fixed at 4 mA will be output and the external contact will not operate.

MEMO

- The magnetic stick is not operable during the initial delay.
- The initial delay lasts approximately 30 seconds after the power is turned ON.

1) When the power supply is turned ON, all of the indicator lamps (green, red, and yellow lamps) and the display block are lit.

2) While the indicator lamps (green, red, and yellow lamps) are lit, the following items will be lit for approximately 1 second each.

Model [PdA]
↓
Software version number (of the main unit)
↓
Full scale — Example [2000] ppm
When the full-scale value is 2000 ppm.
↓
Alarm set value — Example [500] ppm
When the alarm set value is 500 ppm.

3) Then the POWER indicator (green lamp) will be flashed for approximately 25 seconds.

4) When the POWER indicator (green lamp) is lit, the start-up of the main unit is completed and the main unit will be in gas monitor mode.

* Make sure that the flow volume of the flow checker is more than 0.5 L/min.

MEMO

- If the sensor unit has not been turned ON for a long time after the product is shipped from factory, it may take some time for the sensor output to stabilize.
- If needed, turn ON the product for approximately one week, and make the zero adjustment and span adjustment. Refer to *11.3 Calibration Method* for the adjustments.

9. Display and Operation in Each Mode

		In excess of alarm set value			
	At start-up (Initial delay)	Gas monitor mode	Test mode	Maintenance mode	
				Gas monitor mode	Test mode
Contents of display	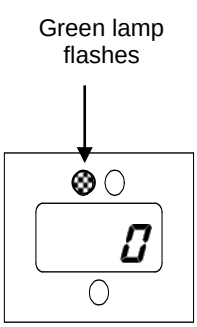	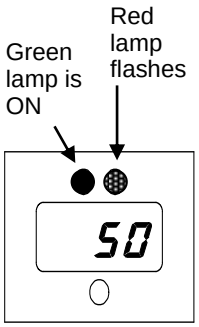	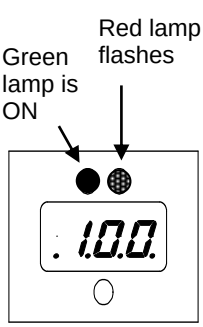	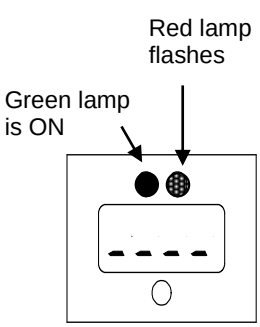	
	The value according to gas concentration is displayed. The value gradually approaches zero.	Gas concentration is displayed.	[Set concentration] A full-scale test from −10% to 110% is possible.	[- - - -] [Gas concentration] Displayed alternately	[- - - -] [Test value] Displayed alternately
Analog signal 4 to 20 mA	Fixed at 4 mA	Gas concentration value is output.	Test value is output	Gas concentration value is output.	Test value is output.
Contact operation	Does not operate (OFF).	Operates (ON).	Operates (ON).	Does not operate (OFF).	Does not operate (OFF).

10. Trouble Alarm

- The product has a self-inspection function, and the trouble alarm will operate if a problem occurs.
- The product will inform the user of the problem details with the display shown in the following table when the trouble alarm operates.
- When the trouble alarm is generated, the analog signal will be approximately 0.9 mA or below.

Screen display	Trouble indicator	Problem details	Probable cause	Remedy
E-24	Yellow lamp flashes	Power supply voltage drop error	The power supply voltage is low.	Check the power supply voltage.
E- 8 E- 9	Yellow lamp flashes	Sensor error	The sensor connector is disconnected or the sensor wire has broken.	Check that the sensor connector is securely connected. If a sensor connector failure or broken wire has possibly occurred, contact your local representative.
E- 6 E- 7	Lamp is OFF	Zero-point adjustment error	There is gas in the ambient air.	After checking the ambient air, make the zero adjustment again.
E- 4 E- 5	Lamp is OFF	Span adjustment error	The gas concentration applied for adjustment is wrong.	After checking the type and concentration of gas, make a span adjustment again.
				If the type and concentration of gas is suitable, make span rough adjustment.
F (F and gas concentration are displayed alternately)	Yellow lamp flashes	Low flow volume error	Possible clog or dirty filter element of FC-32.	Replace filter element of FC-32.
			Possible clog in the sampling pipe.	Clean the clogged pipe.

* The flow trouble alarm is optional function.

- If a screen other than the above is displayed, refer to the *Troubleshooting* section. If the product does not reset to normal operation after taking the measures shown in the table or if the problem is not listed in the table, contact your local representative.
- If the product goes into any unintended mode during adjustment or setting, cease operating the product and contact your local representative..

11. Maintenance Check and Operation Method

11-1. Daily Inspection and Periodical Inspection

- Daily inspections are conducted by the user, while periodical inspections are conducted by your local representative.

	Frequency	Checking item	Contents of inspection
Daily inspection	At least once per month	Visual inspection	・The status of lamp (green POWER indicator) is lit. ・The concentration display of the gas concentration indicator. ・Corrosion of the gas detector. ・Corrosion of mounting screw. If a failure is found, replace the parts. ・Confirm the flow volume. Check the flow volume by reading the scale on the flow checker. It is normal if the flow volume is more than 0.5L/min. If the volume is less than 0.5L/min., check the following possible clog and other causes that may decrease the flow volume before replacing the pump for sample draw. ・Clogged sampling tip / gas collector. ・Clogged sampling pipe ・Clogged or dirty filter.

	Frequency	Checking item	Contents of inspection
Daily inspection	Minimum intervals of 2 to 3 months	Alarm operation check with real gas	・Apply inspection gas to the gas detector and check the operation of the alarm. ・Remove the upper cup of the flow checker and connect a gas bag as below, and apply inspection gas. 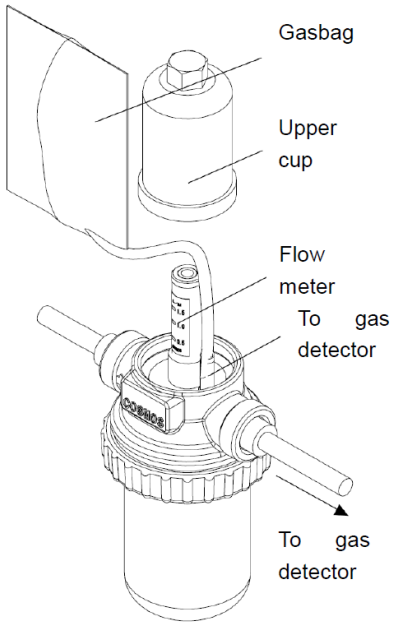
Periodical inspection	At least once per year	Consult your local representative。	

Periodical Inspections

In order to maintain the reliability of the gas detection/alarm system, it is extremely important to conduct maintenance and inspections.

Moreover, it is necessary to use actual gas (combustible gas or poisonous gas), to carefully conduct inspection and calibration. It is highly recommended that you consider periodical inspections under a maintenance contract with your local representative.

11-2. Preparing Calibration Gas

- Calibration gas is used for actual gas inspection.

- The following example shows how to prepare 0.72 vol% (40%LEL) isobutane as a reference gas.

With a standard gas cylinder

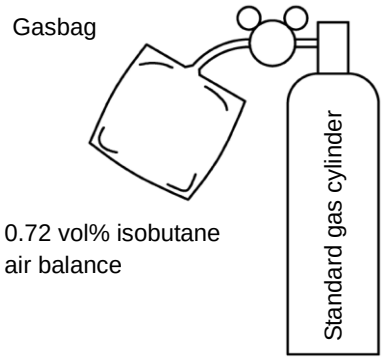

- Use a urethane gasbag. Leave for about 30 minutes after drawing the gas and bring humidity in the bag close to the ambient condition before use.

With no calibration gas cylinder

- Use the Gas Calibration Kit (optional item) and a pure gas cylinder of isobutane at 99 vol% or more, and dilute the isobutane with air to produce 0.72 vol% (40%LEL) calibration gas.

Memo The calibration gas can be used to check the alarm function. Check the concentration using Gas Detector XP-3310Ⅱ or a similar device before using the gas for calibration.

⚠ **DANGER**	● Make sure that there are no flammables nearby when handling flammable gas with a concentration over LEL (lower explosive limit).

(1) Drawing raw gas
Connect a gas bag to an isobutane 99vol% cylinder and draw a little more than you actually need.
Bend back the hose and pinch with a pinch cock so the gas does not leak from the bag.

(2) Drawing a fixed amount of raw gas
Connect a 10ml syringe to a gas bag and draw 7.2ml of raw gas. (Draw a little more than you actually need then discharge the excess.)

(3) Transferring raw gas into a quantitative pump
Connect a syringe to the inlet of a quantitative pump then pull out the pump's piston. Raw gas in the syringe is sucked into the pump. Remove the syringe and pull the piston all the way out (100ml).

(4) Making diluted gas
Connect an empty gasbag to the outlet of the quantitative pump then push in the pump's piston.
Move the piston back and forth 9 times to add air in order to make diluted gas.

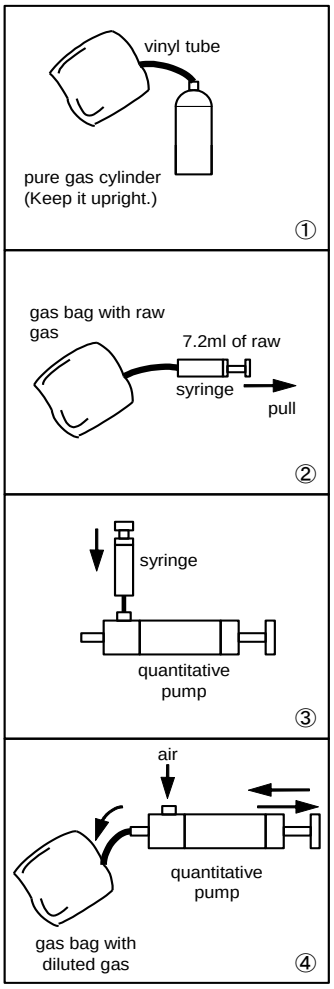

Memo

If you take 7.2ml of raw gas and move the quantitative pump's piston back and forth 10 times (a back-and-force motion: 100ml),

7.2ml/(100ml×10)=0.0072

0.72vol% diluted gas is made.

Isobutane's lower explosive limit (LEL) is 1.8vol%.

0.72/1.8×100=40.0

40%LEL diluted gas is made.

11-3. Calibration Method

● Maintenance Mode

⚠ CAUTION

- While in maintenance mode, the external contact does not operate when the concentration of gas reaches or exceeds the alarm set value. The product in maintenance mode maintains the current status while the display shows [- - - -]. This mode is canceled by repeating the same operation(1 to 4), turning the product OFF, or waiting 8 hours.

1) While in gas monitor mode, press the MODE switch of the main unit first. Then press the UP switch with the magnetic stick within approximately 2 seconds.
2) The main unit displays CAL. first, followed by 0.
   (The product is ready to work but nothing has been operated.)
3) Press the UP or DOWN switch of the main unit with the magnetic stick and adjust the value to 0.
4) Press the ENTER switch of the main unit.

- - - -
↕
Gas concentration

5) When the above items are displayed alternately, the product has been set to maintenance mode.
6) Upon completion of this mode, the product will automatically return to gas monitor mode.
7) While - - - - is displayed, the maintenance mode is being executed.
8) This mode will be canceled by repeating the same operation (1 to 4 above), turning the product OFF, or waiting for 8 hours.

Carefully handle and make settings with the magnetic stick because the magnet is very powerful. For details, refer to *3. Contents of Package*.

● Zero Adjustment

- The external contact may operate. Therefore, set the product to maintenance mode if needed.

MEMO Conduct the zero adjustment in a place where there is no ambient gas.

1) While in gas monitor mode, press the MODE switch of the main unit first. Then press the UP switch with the magnetic stick within approximately 2 seconds.
2) The main unit displays CAL. first, followed by 0.
   (The product is ready to work but nothing has been operated.)

3) Press the UP or DOWN switch of the main unit with the magnetic stick and adjust the value to 1.
4) Press the ENTER switch of the main unit.
5) After pressing the ENTER,

2.Er.o.
↓
0
↓
Good

When the above items are displayed, the zero adjustment is completed.

6) Upon completion of the zero adjustment, the product will automatically return to gas monitor mode.

- If an error is displayed, refer to 10. Trouble Alarm.
- Carefully handle and make settings with the magnetic stick because the magnet is very powerful. For details, refer to 3. Contents of Package.

● Span Fine-tuning

MEMO

Be sure to conduct the zero adjustment before performing span fine-tuning.

⚠ CAUTION

- The external contact may operate during span fine-tuning. Set the product to maintenance mode or release the interlocks of the external devices if needed before performing span fine-tuning.
- Only your local representative's maintenance service members or personnel who have completed a maintenance seminar can perform fine-tuning.

1) Apply calibration gas corresponding to the equipment.

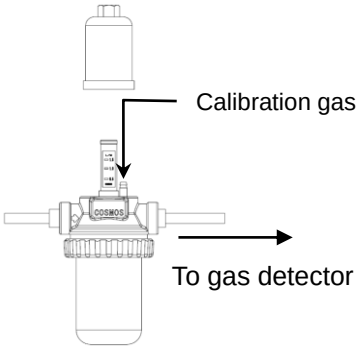

2) Sufficiently stabilize the gas.
3) While in gas monitor mode, press the MODE switch of the main unit first. Then press the UP switch with the magnetic stick within approximately 2 seconds.
4) The main unit displays CAL. . first, followed by . . .0.
(The product has completed starting but nothing has been operated.)

5) Example: After zero adjustment, ...1. will be displayed.
6) Press the UP or DOWN switch of the main unit with the magnetic stick and adjust the value to . . .2.
7) Press the ENTER switch of the main unit.
8) The main unit displays S.F. . . first, followed by the present gas concentration.
9) Press the UP or DOWN switch of the main unit with the magnetic stick, and adjust the display of the main unit to the actual span gas concentration.
10) Press the ENTER switch.
11) The span fine-tuning is completed when Good is displayed.
12) Upon completion of the span fine-tuning, the product will automatically return to gas monitor mode.
13) Remove the gasbag.
    - Perform span rough adjustment if E- 4 or E- 5 is displayed.
    - If an error is displayed, refer to *10. Trouble Alarm*.
    - Carefully handle and make settings with the magnetic stick because the magnet is very powerful. For details, refer to *3. Contents of Package*.

● Span Rough Adjustment

• Perform span rough adjustment if E- 4 or E- 5 is displayed.

⚠ CAUTION

- The external contact may operate during span rough adjustment.
  Before performing span rough adjustment, set the product to maintenance mode or release the interlocks of the external devices if needed.
- Only your local representative's maintenance service members or personnel who have completed a maintenance seminar can perform span rough adjustment.

1) Apply calibration gas corresponding to the equipment.
2) Sufficiently stabilize the gas.
3) While in gas monitor mode, press the MODE switch of the main unit first. Then press the UP switch with the magnetic stick within approximately 2 seconds.
4) The main unit displays CAL. . first, and displays . . .0.
   (The product is ready to work but nothing has been operated.)
   Example: After zero adjustment, . . . 1. will be displayed.
5) Press the UP or DOWN switch of the main unit with the magnetic stick and adjust the value to . . .7.
6) Press the ENTER switch of the main unit.
7) The main unit displays Sr. . . first, and displays the present gas concentration.
8) Press the UP or DOWN switch of the main unit with the magnetic stick, and adjust the display of the main unit close to the actual span gas concentration.
9) Press the ENTER switch.
10) The span rough adjustment is completed when Good is displayed.
11) On completion of the span rough adjustment, the product will automatically return to gas monitor mode.
12) Remove the gasbag.

MEMO Precise adjustment is not performed only by span rough adjustment. Perform span fine-tuning after span rough adjustment.

- If an error is displayed, refer to *10. Trouble Alarm*.
- Carefully handle and make settings with the magnetic stick because the magnet is very powerful. For details, refer to *3. Contents of Package*.

● Full-scale and Alarm Set Value Display

• The full-scale and alarm set values are only displayed. They cannot be changed.

1) While in gas monitor mode, press the MODE switch of the main unit first. Then press the UP switch with the magnetic stick within approximately 2 seconds.
2) The main unit displays CAL. first, and displays 0.
   (The product is ready to work but nothing has been operated.)
   Example: After zero adjustment, 1 will be displayed.
3) Press the UP or DOWN switch of the main unit with the magnetic stick and adjust the value to 4.
4) Press the ENTER switch of the main unit.

F.S.d.P.
↓
F.S.
↓
Full scale
↓
AL.
↓
Alarm set value

5) When the above items are displayed in sequence and repeatedly, the user can check the full-scale and alarm set values.
6) After the full-scale and alarm set values are displayed, the product will automatically return to gas monitor mode.

• Carefully handle and make settings with the magnetic stick because the magnet is very powerful. For details, refer to *3. Contents of Package*.

● Test Mode

• Test values are adjusted and used for tests in this mode.

⚠ CAUTION

● The external contact may operate while the product is in test mode.
Before setting the product to test mode, set the product to maintenance mode or release the interlocks of the external devices if needed.

1) While in gas monitor mode, press the MODE switch of the main unit first. Then press the UP switch with the magnetic stick within approximately 2 seconds.
2) The main unit displays CAL. first, and displays 0 .
(The product is ready to work but nothing has been operated.)
Example: After zero adjustment, 1 will be displayed.
3) Press the UP or DOWN switch of the main unit with the magnetic stick and adjust the value to 10 .

4) Press the ENTER switch of the main unit.

tESt
↓
Test value

5) When the above items are displayed, the test operation of the product in a concentration range from –10% to 110% of the full scale is possible.
The test operation of the product is possible in a concentration range from –200 to 2200 ppm if the full scale of the product is 2000 ppm.
The test operation of the product is possible in a concentration range from –10%LEL to 110%LEL if the full scale of the product is 100%LEL.
6) Press the UP or DOWN switch of the main unit and set the desired concentration for the test. Then the test will start.
If the setting is outside the operating range, LLLL or HHHH will be displayed.
7) To quit the test mode, press the ENTER or MODE switch.
8) When the test is finished with the ENTER switch pressed, the tested value will be saved. When the test is finished with the MODE switch, the previously saved value will remain.

• Carefully handle and make settings with the magnetic stick because the magnet is very powerful. For details, refer to *3. Contents of Package*.

11-4. Replacement of Sensor Unit

⚠ WARNING

- Do not open when energized.
- Do not open when an explosive atmosphere may be present.
- Be sure to turn OFF the indicator unit or signal converter before replacing a sensor unit. Otherwise, they may become a source of ignition.
- Do not damage the surface of the joints of detector enclosure, or the explosion proof performance of the detector may be adversely affected.

⚠ CAUTION

- Only your local representative's maintenance service members or personnel who have completed a maintenance seminar can replace the sensor unit.
- Be sure to handle the sensor unit with care. Do not drop or throw the sensor unit. Otherwise, the sensor wire may be disconnected or a sensor may be damaged.
- The external contact may operate when replacing the sensor unit if the sensor output is not stable. Release the interlocks of the external devices if needed.
- When removing or mounting the sensor unit, do not twist the harness of the sensor connector.
- When closing the casing cover, make sure that the power supply cord, harness, or O-ring is not caught by the casing cover.

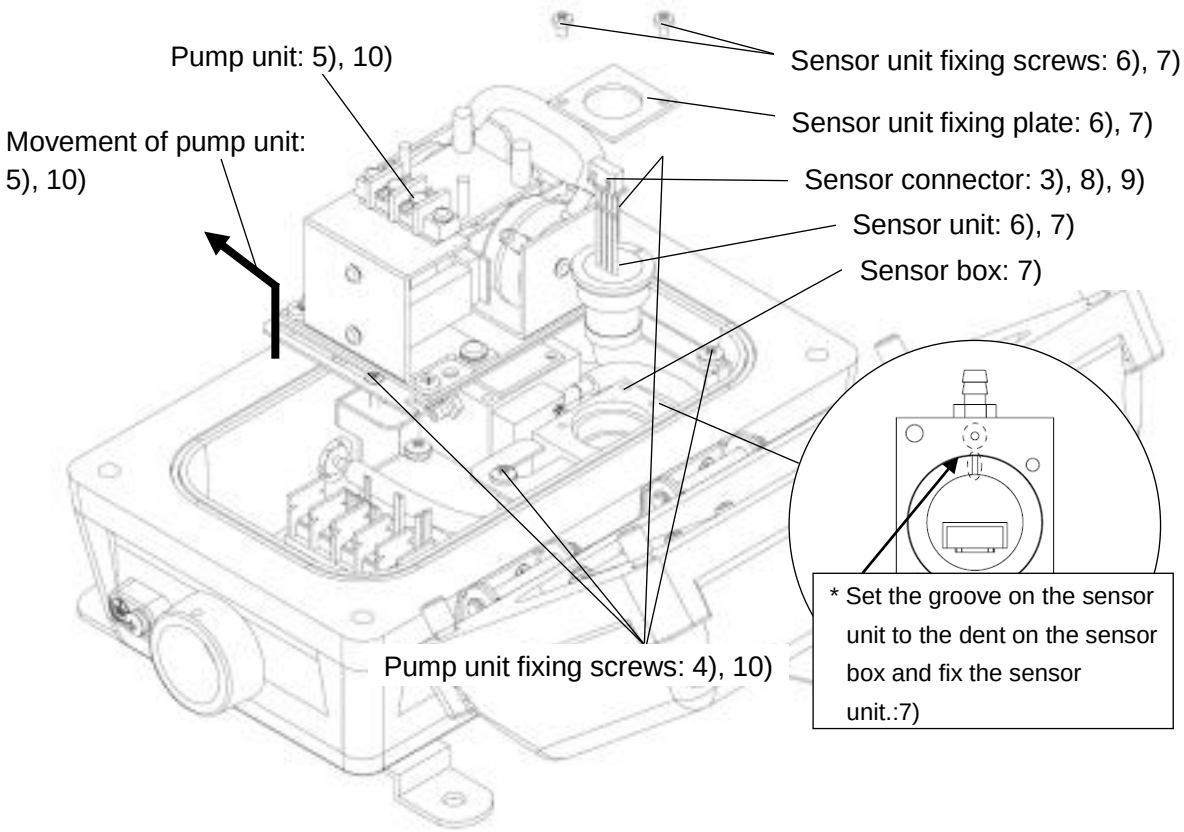

1) Turn OFF the power supply connected to the product.
2) Loosen the bolt with a hexagon socket on each of the four corners of the main unit with the provided hexagon wrench with a nominal diameter of 6 mm, and open the casing cover of the main unit.(See “4-1. Main unit”)
3) Disconnect the sensor connector.
4) Loosen the 4 pump unit fixing screws.
5) Pull the pump unit and slide it to left.
6) Remove 2 sensor fixing screws and remove sensor unit fixing plate and sensor unit.
7) Fix new sensor unit and sensor unit fixing plate and tighten the screws removed.

   * Set the groove on the sensor unit to the dent of the sensor box when fixing the sensor unit.
8) Connect the sensor connector to the sensor.
9) Check that the sensor connector is connected securely.
10) Place the pump unit where it was and fix it with the screws.
11) Tighten the bolt with a hexagon socket on each of the four corners of the main unit with the provided hexagon wrench with a nominal diameter of 6 mm, and close the casing cover of the main unit. (See “4-1. Main unit”)
12) Turn ON the power supply connected to the product.
13) When the sensor unit has been replaced, it is necessary to make zero adjustment and span adjustment after keeping the product turned ON for approximately one week to stabilize the sensor output.
14) Be sure to make zero adjustment first, followed by span adjustment.
15) If an error is displayed, refer to 10. Trouble Alarm.

MEMO

- It is possible to replace the sensor unit without removing tube connected to the pump unit.
- Return the used sensor unit to your local representative.

11-5. Replacement of Pump Unit

⚠ WARNING

- Do not open when energized.
- Do not open when an explosive atmosphere may be present.
- Be sure to turn OFF the indicator unit or signal converter before replacing a sensor unit. Otherwise, they may become a source of ignition.
- Do not damage the surface of the joints of detector enclosure, or the explosion proof performance of the detector may be adversely affected.

⚠ CAUTION

- After replacing the pump unit, make sure that all of the wirings and piping connections are correctly connected.

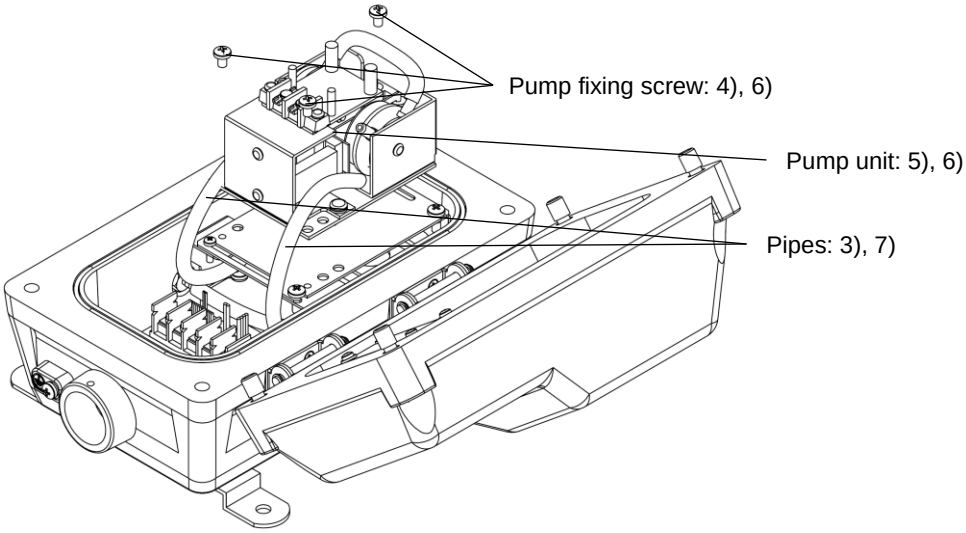

1） Turn OFF the power supply connected to the product.

2） Loosen the bolt with a hexagon socket on each of the four corners of the main unit with the provided hexagon wrench with a nominal diameter of 6 mm, and open the casing cover of the main unit.(See “4-1. Main unit”)

3） Disconnect the 2 pipes connected to the pump unit.

4） Loosen the 3 pump unit fixing screws.

5） Remove the pump unit.

6） Fix a new pump unit with 3 pump unit fixing screws.

7） Connect the 2 pips to the pump unit.

8） Tighten the bolt with a hexagon socket on each of the four corners of the main unit with the provided hexagon wrench with a nominal diameter of 6 mm, and close the casing cover of the main unit. (See “4-1. Main unit”)

9） Turn ON the power supply connected to the detector.

10）Check the sample air flow rate with the filter with flow checker (FC-32) and confirm that the flow is more than 0.5 liter /min.

11-6. Replacement of Filter with Flow Checker (FC-32)

Filter should be clogged if the flow rate returns to normal value (0.5 liter / min.) when the filter in the flow checker is removed.　Please replace the filter when it is necessary.

1) Loosen the fastener ring of flow checker to remove the bottom cup.
2) Pull the filter downward to remove.
3) Replace the filter with a new one and fix the bottom cup back on.
4) Confirm that the flow rate of the flow checker is more than 0.5 liter / min.

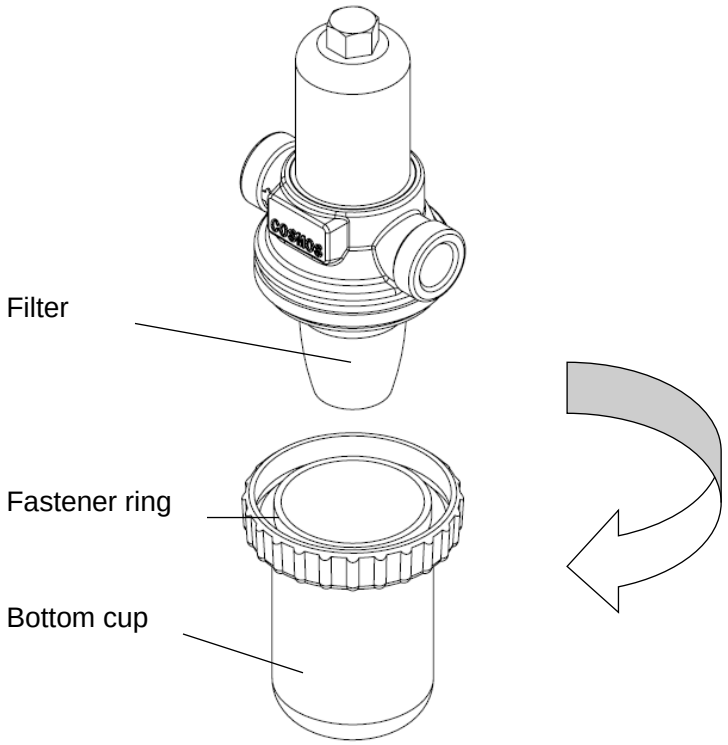

12. Troubleshooting

- Before requesting repairs, refer to the following table. Consult your New Cosmos representative if the product does not return to normal after taking the corresponding remedies shown below or if the defective condition is not found in the table.
- If the product goes into an unintended mode at the adjustment or setting stage, stop operating the product immediately and consult the system administrator.

Defective condition	Probable cause	Remedy	Reference page
The green power lamp is not lit.	Incorrect wiring connection.	Check and redo the wiring.	P. 13 Wiring and Connection
The yellow lamp to indicate an error is flashed and the error code is displayed.	E-24 Low-voltage state	Check the power supply voltage.	
	E- 8 E- 9 The sensor unit is defective, the connector is disconnected, or the sensor wires are broken.	Check that the sensor connector is connected securely.	P. 13 Wiring and Connection
		If there is a possibility that the sensor is defective or sensor wires are broken, contact your local representative.	
	F※ Clogged gas inlet, sampling pipe or filter.	Check that a possibility of clogged gas inlet, sampling pipe and filter.	P. 33 Replacement of Filter with Flow Checker
The detected gas concentration and - - - - are flashing alternately.	The product is in maintenance mode.	Return the product to gas monitor mode.	P. 24 Maintenance Mode
There is no alarm contact output.	The product is in maintenance mode.	Return the product to gas monitor mode.	P. 24 Maintenance mode
	Incorrect wiring connection.	Check and reconnect the wiring.	P. 13 Wiring and Connection
	The alarm point setting is wrong.	Check the alarm setting.	P. 28 Full-scale and Alarm Set Value Display
The analog signal does not change	The product is in test mode.	Return the product to gas monitor mode	P. 29 Test mode
A value and HHHH are flashing alternately.	The sensor output is high.	The concentration of gas is in excess of the full scale. Check the ambient environment.	

Defective condition	Probable cause	Remedy	Reference page
A value and LLLL are flashing alternately.	The sensor output is low.	Conduct zero adjustment after checking that the air around the product is not contaminated with gas.	P. 25 Zero adjustment
No adjustment or setting is possible.	The product is operated during the initial delay time.	Operate the product after the 30-second initial delay time.	P. 17 Display at Start-up (Initial Delay)

※ The flow trouble indication is optional function.

13. Specifications

13-1. Product Specifications

Model	PD-12Ⅱ
Corresponding sensor type	PD-12ⅡA : Hot wire semiconductor sensor PD-12ⅡB : Catalytic combustion sensor PD-12ⅡC : Thermal conductivity sensor
Sampling method	Extractive
Detection gas	Depends on the specifications.
Detection range	Depends on the specifications.
Gas concentration display	Four-digit digital LED display
Alarm set value	Depend on the specifications.
Alarm accuracy	• Combustible gas: ±25% of alarm set value under identical conditions. • Toxic gas: ±30% of alarm set value under identical conditions.
Alarm delay	• Combustible gas: Within 30 seconds with gas concentration that is 1.6 times as high as the level of alarm set concentration. • Toxic gas: Within 60 seconds with gas concentration that is 1.6 times as high as the level of alarm set concentration.
Warning display	• Gas alarm (one stage only): Red LED lamp flashes • Trouble alarm (sensor disconnection, sensor zero drop, Flow decrease (It's optional function), power supply voltage error, or internal EEPROM communication error): Yellow LED lamp flashes
External output	Gas concentration analog signal • 4 to 20 mA DC (common to the negative side of power supply) • 0.9 mA DC or less at the time of Trouble alarm. • Make sure that the load resistance of the analog signal is less than 300 ohm including the wiring resistance.
	When flow decrease (It's optional function.) •Flow decrease alarm when the flow rate is less than 0.3 liter / min. No contact output (Open collector) non-latching Normally ON, when trouble OFF, when no power OFF (Max. rating : 30V DC 30mA) External alarm output (standard) or external trouble output External alarm output (1 stage only) 1a no-voltage contact output/Non-latching Rated load: 0.5 A at 250 VAC or 0.5 A at 30 VDC (resistance load) External trouble output 1a no-voltage contact output/Non-latching Rated load: 0.5 A at 250 VAC or 0.5 A at 30 VDC (resistance load)
Equipment or Protective System intended for use in Potentially Explosive Atmospheres	Directive 2014/34/EU SI 2016 No.1107

Approvals	EU-Type Examination Certificate (CML 17ATEX1160): CE 2776 Ex II 2G Ex db IIB+H_2 T4 Gb UKEx Examination certificate (CML 21UKEX1886): UKCA 2503 Ex II 2G Ex db IIB+H2 T4 Gb IECEx (IECEx CML 17.0080): Ex db IIB+H_2 T4 Gb EMC : EN61000-6-4:2007+A1:2011, EN 50270:2015 Type 2 Performance testing: The measuring function of the PD-12Ⅱ gas detector for explosion protection in accordance with Annex II clauses 1.5.5, 1.5.6 and 1.5.7 of the Directive 2014/34/EU, is not covered in this certificate.
Harmonised/Designated standards	EN IEC 60079-0:2018 EN 60079-1:2014 IEC 60079-0:2017 Ed. 7 IEC 60079-1:2014-06 Ed. 7
Degree of protection	IP65 (interior)
Applicable cable	Cable outer diameter 10.5 to 14.5 mm • In case of a 6-conductor cable (for power supply, gas concentration analog signal, flow decrease, and gas alarm or trouble alarm contact): CVV-S 1.25 mm^2 or 2.0 mm^2
Operating temperature and humidity ranges	• Temperature: −10°C to ＋50°C • Humidity 10% to 90% (0 to ＋50°C). (No radical temperature or humidity changes and no condensation)
Power supply	24 VDC±20%
Size	133 (W) x 229 (H) x 132 (D) mm (excluding protruding parts)
Power consumption	11 W max.
Mass	Approx. 5.7 kg
Mounting method	Wall mounting

The above specifications are subject to change without notice.
If your specifications are nonstandard, refer to the delivery specifications.

13-2. Explosion-proof Specifications

Product name	Gas Detector (Extractive Type)
Explosion-proof	EU-Type Examination Certificate (CML 17ATEX1160): Ⓔx II 2G Ex db IIB+H_2 T4 Gb UKEx Examination certificate (CML 21UKEX1886): Ⓔx II 2G Ex db IIB+H_2 T4 Gb IECEx (IECEx CML 17.0080):Ex db IIB+H_2 T4 Gb
Ambient temperature	-10°C to +50°C
Rating	Power supply: 24 VDC (18 to 30VDC) 0.35A (max.) External output : 4-20mA DC External contacts (1 place) : Rated load 250VAC 0.5A / 30VDC 0.5A Flow rate: 2.2 l/min (max.)

* The table above shows the specifications needed to retain explosion-proof characteristics of the product and differs from the actual product specifications as a gas detector. Refer to 13.1. "Product Specifications" for specifications of thegas detector.

<External makings (for explosion-proof model)>

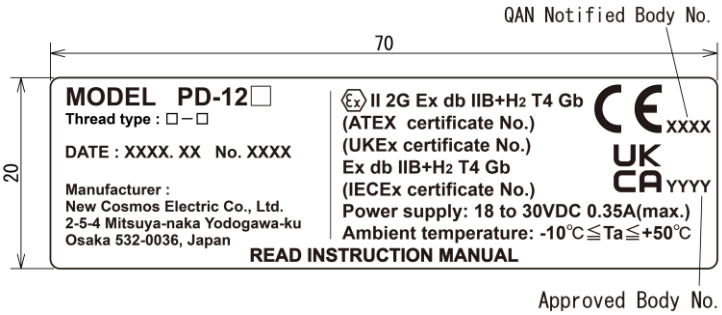

Rating label for CE/UKCA marking model

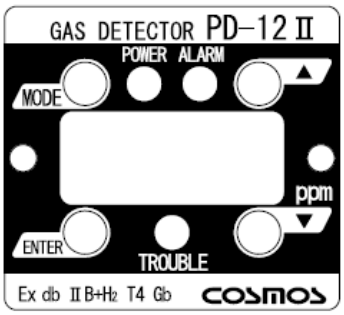

Nameplate

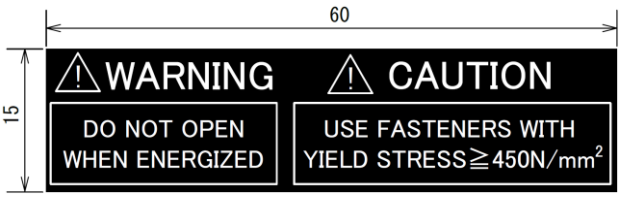

Warning label

(Dimensions are in mm)

Harmonised/Designated standards:

EN IEC 60079-0:2018
EN 60079-1:2014
IEC 60079-0:2017 Ed. 7
IEC 60079-1:2014 Ed. 7

14. Warranty

New Cosmos Electric Company Limited (New Cosmos) offers the following as the sole and exclusive limited warranty available to the customer.

This warranty is in lieu of, and customer waives, all other warranties of any kind or nature, expressed or implied, including without limitation, any warranty for merchantability or fitness for a particular purpose. The remedies set forth herein are exclusive.

New Cosmos warrants to the original purchaser and no other person or entity (the customer) that the gas detection product supplied by New Cosmos shall be free from defects in materials and workmanship for a period of one (1) year from the date of purchase. This warranty does not include consumables, such as fuses, filters, etc. Certain other accessories not specifically listed here may have different warranty periods.

After examination of an allegedly defective product returned to New Cosmos, with freight prepaid, should the product fail to conform to this warranty, the customer's only remedy and New Cosmos's only obligation shall be, at New Cosmos's sole option, replacement or repair of such non-conforming product or refund of the original purchase price of the non-conforming product. In no event will New Cosmos be liable for any other special, incidental or consequential damages or losses of any kind whatsoever, including but not limited to, loss of anticipated profits and any other loss caused by reason of non-operation of the product.

This warranty is valid only if the product is maintained and used in accordance with New Cosmos's instructions and/or recommendations. New Cosmos shall be released from all obligations under this warranty in the event repairs or modifications are made by persons other than its own or authorized service personnel or if the warranty claim results from physical abuse or misuse of the product.

15. Life Expectancy

- The period of designed life expectancy of the product under standard environmental conditions is approximately five years after the date of purchase.
  The period of designed life expectancy after the expiration of the warranty period is a rough standard on the condition that the product is used with specified gas calibration performed. New Cosmos, however, does not guarantee the specified period of designed life expectancy. The product may become unusable before the next calibration is performed.

- The life of the hot wire semiconductor-type sensor incorporated in the PD-12ⅡA is approximately five years after the date of purchase.
  The sensor may not detect gas correctly with the lapse of approximately five years. Replace the sensor at intervals of approximately five years. The life of the sensor is specified on the condition that the sensor is serviced properly and that the sensor is not exposed to high-density gas or toxic gas. New Cosmos, however, does not guarantee the specified life of the sensor.

- The life of the catalytic combustion-type sensor incorporated in the PD-12ⅡB is approximately three years after the date of purchase.
  The sensor may not detect gas correctly with the lapse of approximately three years. Replace the sensor at intervals of approximately three years. The life of the sensor is specified on the condition that the sensor is serviced properly and that the sensor is not exposed to high-density gas or toxic gas. New Cosmos, however, does not guarantee the specified life of the sensor.

- The life of the thermal conductivity sensor incorporated in the PD-12ⅡC is approximately five years after the date of purchase.
  The sensor may not detect gas correctly with the lapse of approximately five years. Replace the sensor at intervals of approximately five years. The life of the sensor is specified on the condition that the sensor is serviced properly and that the sensor is not exposed to high-density gas or toxic gas. New Cosmos, however, does not guarantee the specified life of the sensor.

16. Detection Principle

16-1. Catalytic Combustion

・Catalytic combustion occurs on the catalyst even at a gas concentration below the lower limit of combustion due to the operation of the catalyst applied to the platinum coil. The electrical resistance of the platinum coil increases because of the rise in the temperature at this point. This difference is extracted as deviation voltage in the bridge circuit.
Detection of combustible gases is possible up to the lower explosion limit (LEL).

16-2. Hot Wire Semiconductor

・A small amount of metal oxide semiconductor is deposited on a platinum coil, then the platinum coil is heated to a high temperature. When combustible gases react with oxygen absorbed on the surface of the semiconductor, free electrons increase in the semiconductor. As a result, the resistance of the semiconductor decreases. This resistance change is read as differential voltage using a bridge circuit for gas detection purpose. This type of sensor is very sensitive and thus suitable for low concentration gas detection.

16-3. Thermal Conductivity

・As compared to when only air is present around the sensor, the heat dissipation state of the detection piece (heated to around 150℃) to which an inert substance is applied and sintered on a platinum wire varies with the increase or decrease in the thermal conductivity of the gas, and the temperature of the detection piece changes. This difference is almost proportional to the gas concentration, and therefore, the difference in the resistance of the platinum wire can be extracted as deviation voltage of the bridge circuit.
Although only gases whose thermal conductivity is different from air can be measured, it is possible to detect high-concentration gases between 0% and 100% by volume.

17. Glossary

Indicator / Alarm unit:	A unit that receives signals from the gas detector and indicates gas concentration and alarms.
Detector:	A unit that detects gas concentration and converts it to electric signals.
Backup power source device:	A device that supplies power to the gas detector, indicator / alarm unit in order to maintain its performance during a power failure.
Flow meter:	A meter to measure air flow in gas sampling pipe.
Gas collector:	A gas collecting probe that enhances gas collection efficiency and blocks water and dust.
Diffusion type:	A method to detect gas by utilizing convection and diffusion of gas.
Explosion proof construction:	A totally enclosed structure. When an explosive gas explodes in a container, the container can resist the pressure and prevent the ignition of explosive gases outside of it.
Preset alarm value:	A preset value for the alarm to go off when gas concentration reaches a certain value.
Gas to be detected:	Gas that is detected and indicated which sets off an alarm.
Detection range:	Range of gas's concentration that can be indicated and set off an alarm.
Alarm accuracy:	Difference between the preset alarm value and gas concentration when an alarm actually occurs or as the percentage of the difference compared to the preset alarm value.
Response time:	Time it takes from when the gas detector is exposed to a gas with a concentration higher (lower) than the preset alarm value until an alarm goes off.
Operating temperature:	Range of temperature where the equipment can perform its functions.
Maintenance and inspections:	Work to guarantee that the equipment perform its required functions.
Calibration gas:	Gas used to calibrate scales of the equipment.
Peak hold:	A function to constantly update and hold the peak value of input signals.
Hazardous area:	An area in a plant or facility with a hazardous atmosphere where explosive gases may mix with air and explode or start a fire. An area where gas may be present.
Non-hazardous area:	An area where electric equipment that has no potential to create a hazardous atmosphere.
Hazardous atmosphere:	Atmosphere within the explosive limit where explosive gas and air are mixed.

LEL:	Lower Explosive Limit. The lowest concentration of flammable gas that will explode when mixed with air and ignited.

(Quoted from gas detection terms and detector tube gas meter terms used by the Industrial Gas Detector Alarm Association.)

MEMO

Manual Revision History

Edition No.	Date	Revisions
GAE-190-00	November 2025	00
GAE-190-01	March 2026	01
GAE-190-02	May 2026	02

Additional copies of this Instruction Manual are available.
Contact the following address for ordering information.

Authorized representative:

Manufacturer:

NEW COSMOS ELECTRIC CO., LTD.

2-5-4 Mitsuya-naka, Yodogawa-ku
Osaka 532-0036, Japan

www.new-cosmos.co.jp/en

NEW COSMOS ELECTRIC CO.,LTD.